HARRIS PLATINUM Z™ FM TRANSMITTERS

Virtual Tour

PLATINUM Z SERIES

- 2-10kW output power (3-phase) in a one cabinet; 1-phase 7.5kW & 10kW has second cabinet of equal size
- Broadband, Solid State, N+1 capable
- Common components, & full redundancy from 2-20kW
- DIGIT CD & Dual IPA's standard, alternate exciter optional
- 850 watt Hot-Pluggable PA modules
- Multiple power supplies standard, (Z2 option)
- Advanced controller with Life support back-up

PLATINUM Z CONTROLLER

- 4-line diagnostic LCD display for 100+ parameters & status conditions in a menu format
- Standard parallel remote control capability
- Status LEDs
- Digital Multimeter

PLATINUM Z CONTROLLER
Interior View

- Plug-in card construction
- PA, PS, Master, Life Support & Display Back-Plane boards
- Includes built-in logic and hardware for main/alt. exciter & IPA switching (dual exciter opt.)
- “Life Support” control if Master control board is inoperative
- Redundant power supply control

PLATINUM Z RF MODULE

- Two 425 Watt RF amplifiers per module
- 310-320 watts for normal operation
- Lightweight, Hot-Pluggable and Interchangeable
- Four MOSFET devices per module (two per amp)
- Same module for IPA and PA; a PA can be substituted for an IPA

Weight: 10 pounds
Size: 9”D x 7”W x 4”H

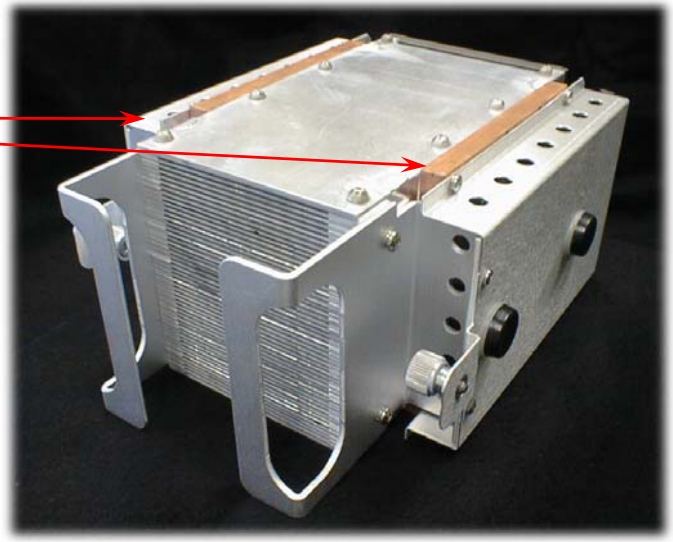

"Z PLANE" I/O ASSEMBLY

- Distributes DC to each PA module
- Distributes control and status
- Receives and splits RF drive to each PA amplifier
- Combines the module RF outputs to 2.5kW level
- Feeds one input of 3dB hybrid combiner
- Two Z-Planes boards per 5kW block

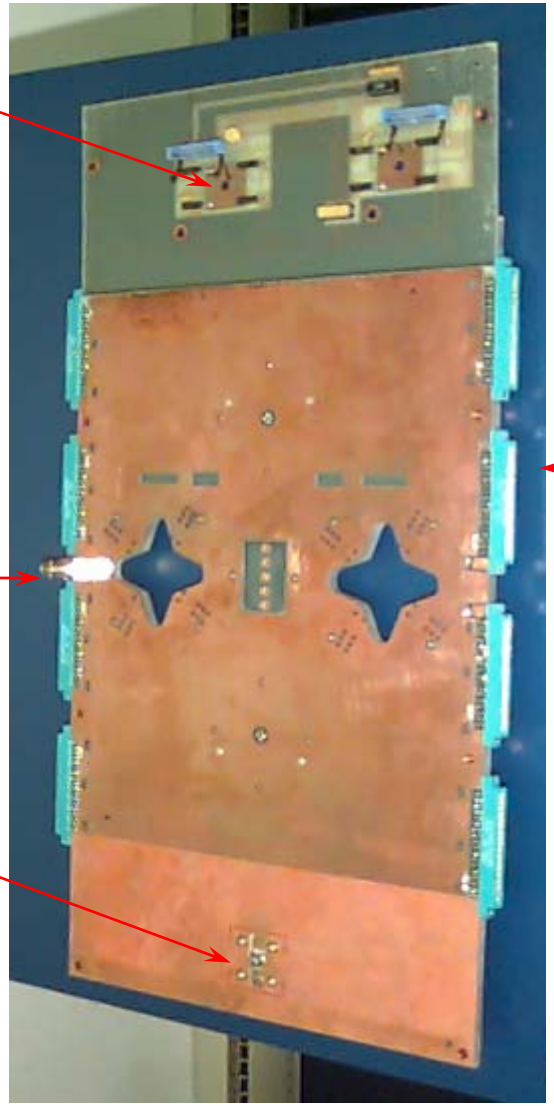

PA AMP Edge Connectors (Qty 8)

PLATINUM Z 5kW COMBINER

- 3 dB hybrid combiner for the 2.5 kW power blocks
- Integrated reject load
- Broadband, 87-108 MHz
- Slim profile
- Fits between two “Z-Plane” I/O assemblies

Z5CD FRONT MODULE AREA

- Four of eight PA modules (remaining four mounted into similar module bay from rear of transmitter)
- Space for second IPA module in Z7.5 and Z10 kW transmitters
- IPA module (uses one amplifier, second is back-up)

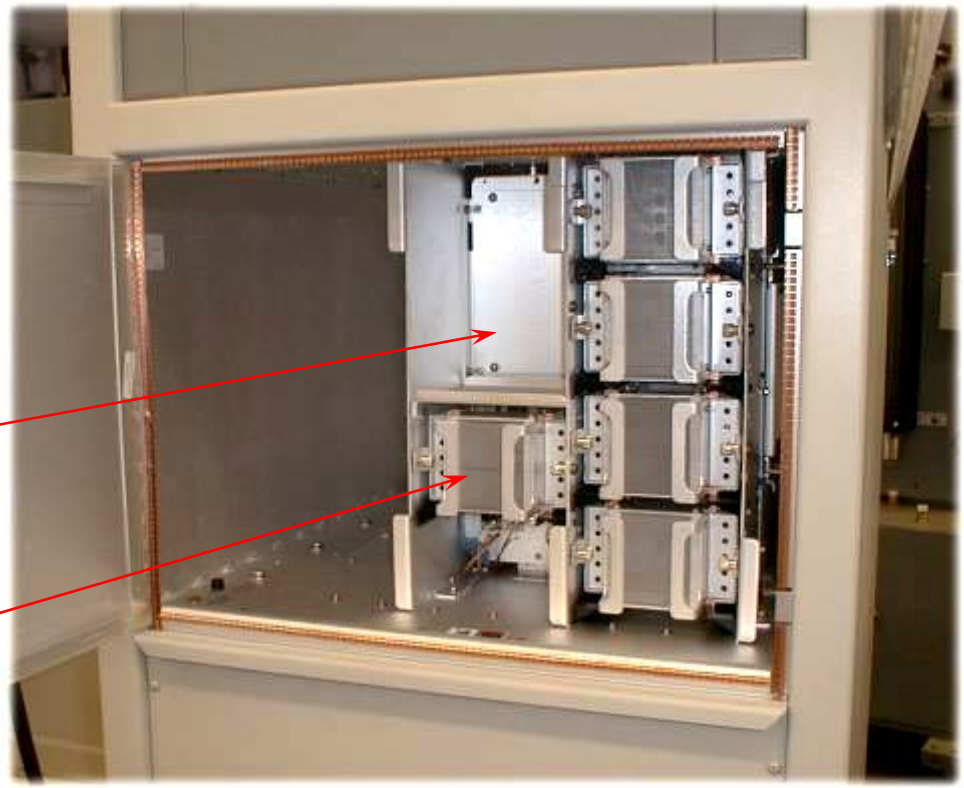

Z5CD REAR MODULES

- Four PA Modules (8 total in Z5)
- Internal Low Pass Filter
- 5 kW combiner output feeds low pass filter input
- Lightning choke between 5 kW output and low pass filter input in the combiner under PA section
- Space for second 5 kW power block for Z10
- No messy coaxial cable combiners

Z10CD FRONT PA MODULE BAY

- IPA amp for left 5 kW power block
- IPA amp for right 5 kW power block
- Alternate IPA amplifiers are on opposite side
- IPA modules are same as PA modules

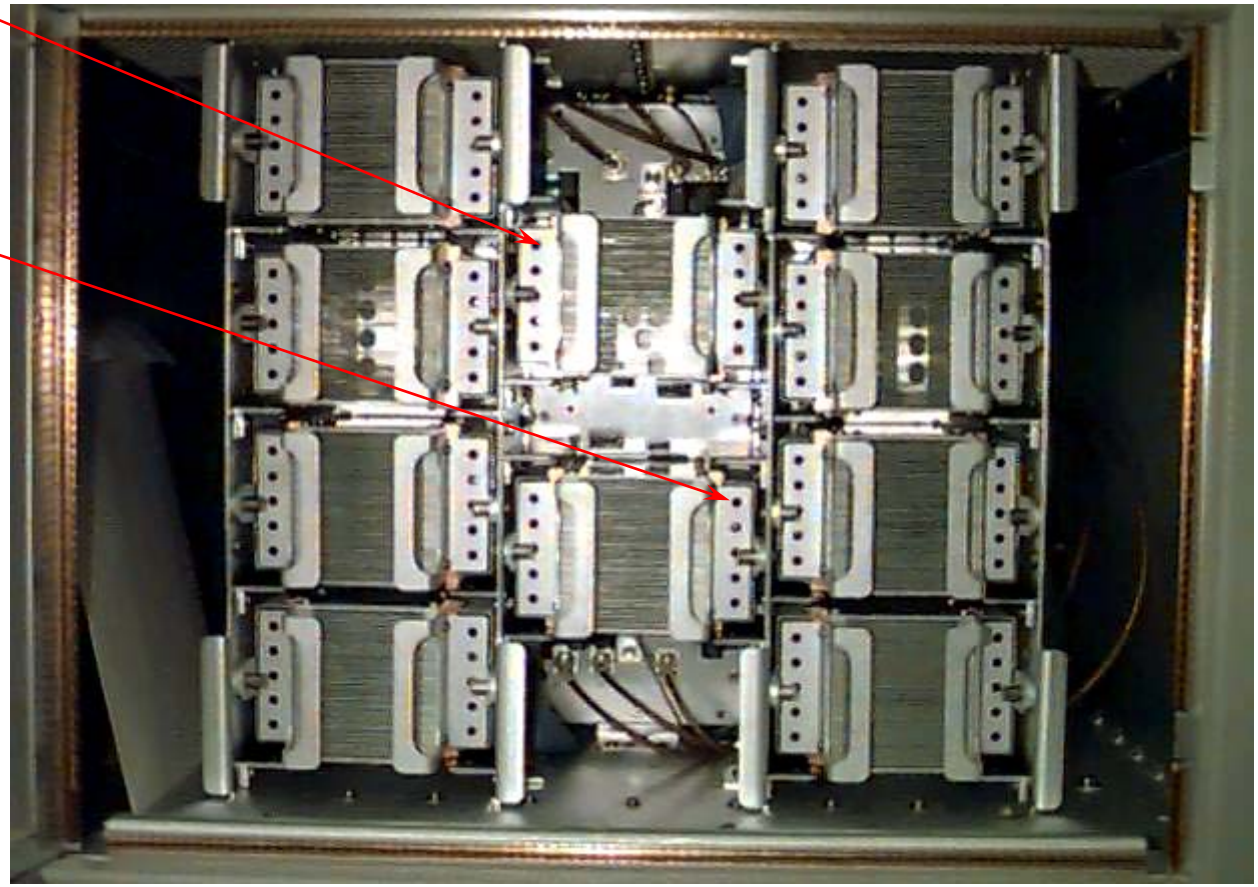

Z10CD REAR VIEW

- Remaining eight RF modules of sixteen total
- Internal Harmonic Filter
- 10 kW 3 dB hybrid below PA section
- Lightning choke included in 10 kW combiner

ZCD AC ENTRANCE

- AC enters top, right, rear of cabinet to AC contactor
- Includes low voltage supply circuit breaker & MOV surge protection
- Available for single and three phase power
- RF directional couplers & RF sample for test equipment

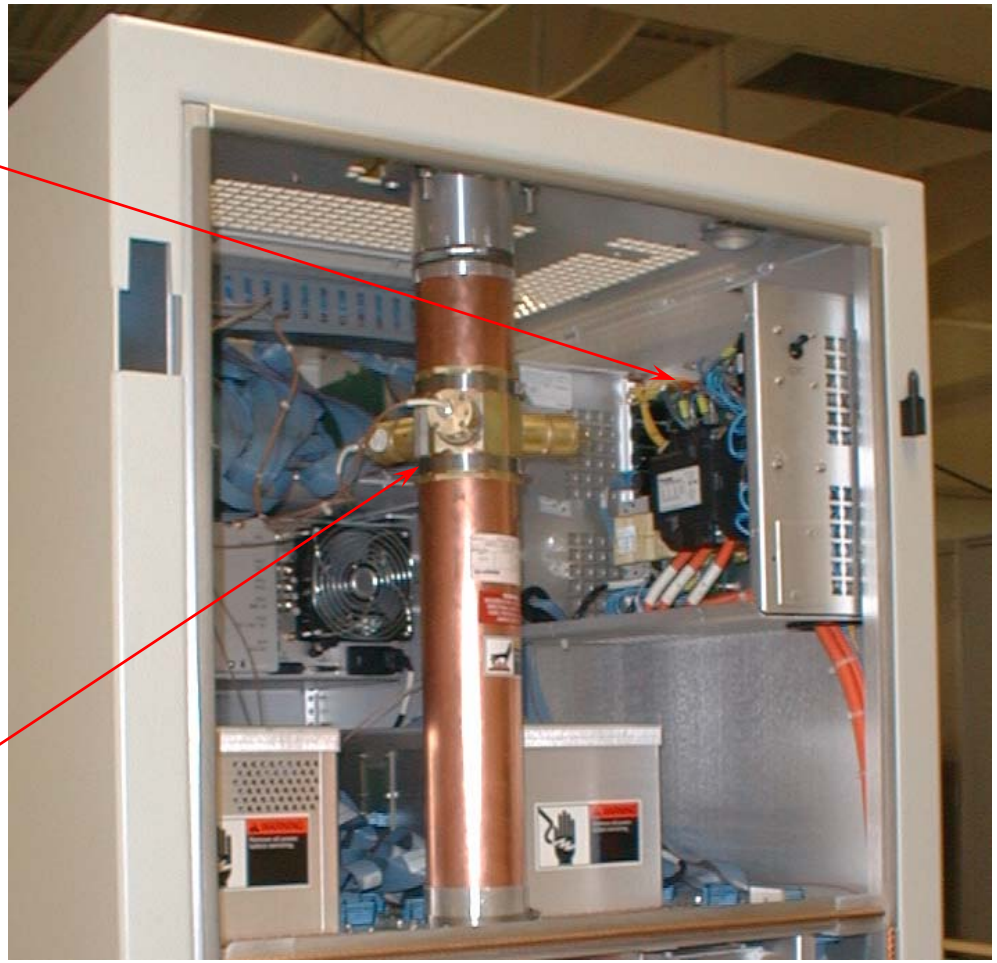

ZCD PA POWER SUPPLIES

- 48 to 54 VDC output in four steps
- High-efficiency design using “step regulation”
- Good power factor (>0.95, nominal)
- Low AC line harmonics
- Mounted on roll-out base, removeable through front of transmitter

- Two power supplies per 5kW power block for high reliability
- Both supplies feed both Z-Planes to maximize power output if one supply fails

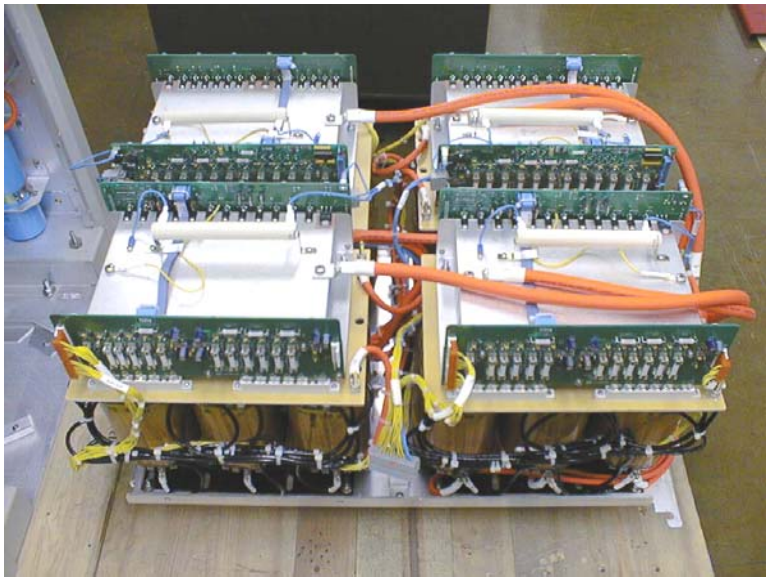

Four Three Phase Supplies shown

DUAL (1P) POWER SUPPLIES

- Two single phase power supplies per transmitter cabinet
- Z7.5 and Z10 use a second cabinet for the remaining two supplies
- Upper 2/3 of the second cabinet is set-up as standard 19” EIA rack space

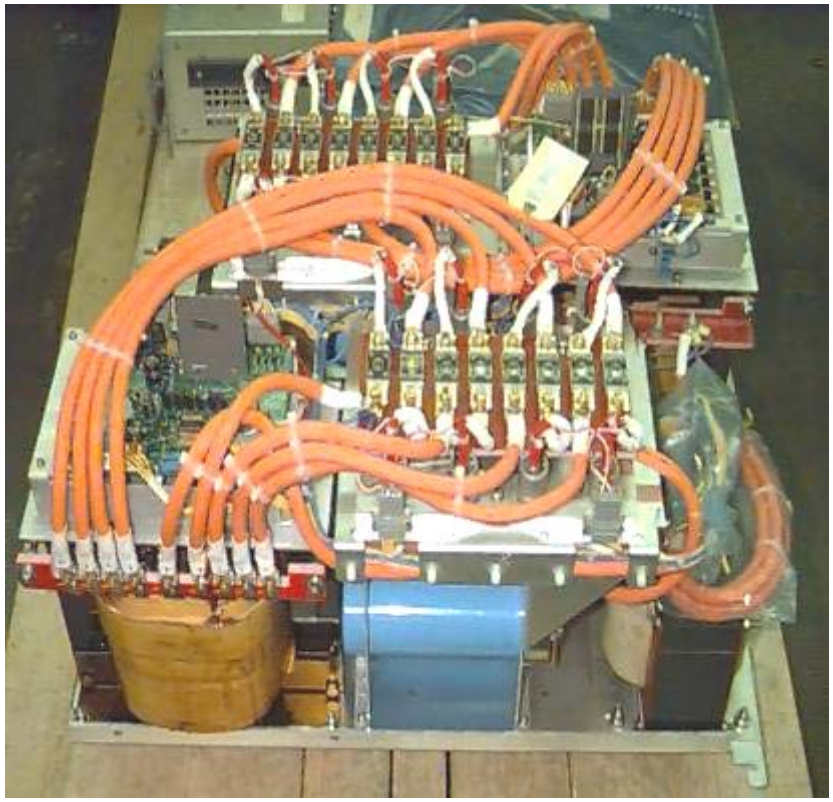

Two Single Phase Supplies shown

PLATINUM Z AIR SYSTEM

- Fan in lower section (direct drive, no belts)
- Dual speed, premium fan motor
- Air enters lower section and exits the top left and right side of transmitter
- Upper section of transmitter accessible during operation
- External air interface provided through additional ducting on transmitter exterior (custom)

Internal Fan

Z5CD BLOCK DIAGRAM

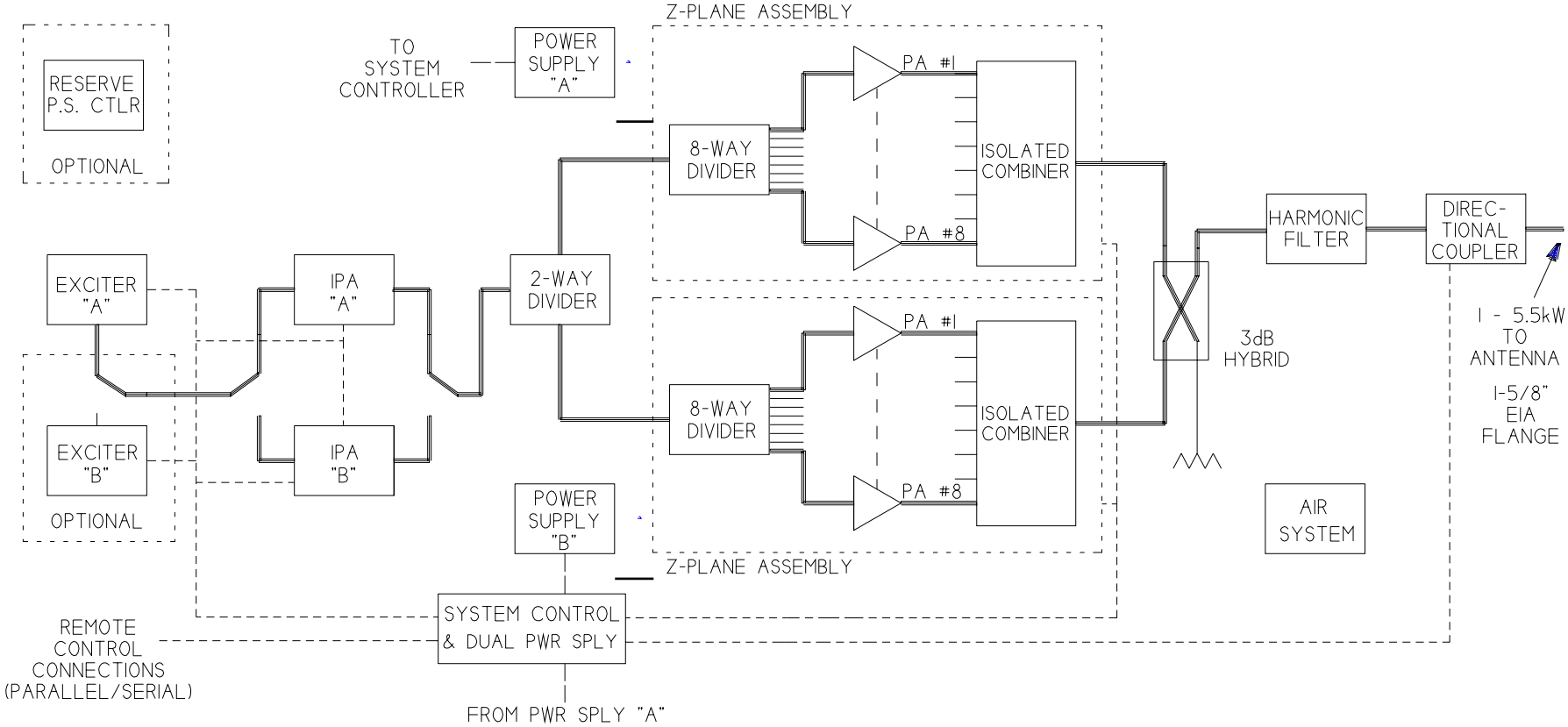

Z10CD BLOCK DIAGRAM

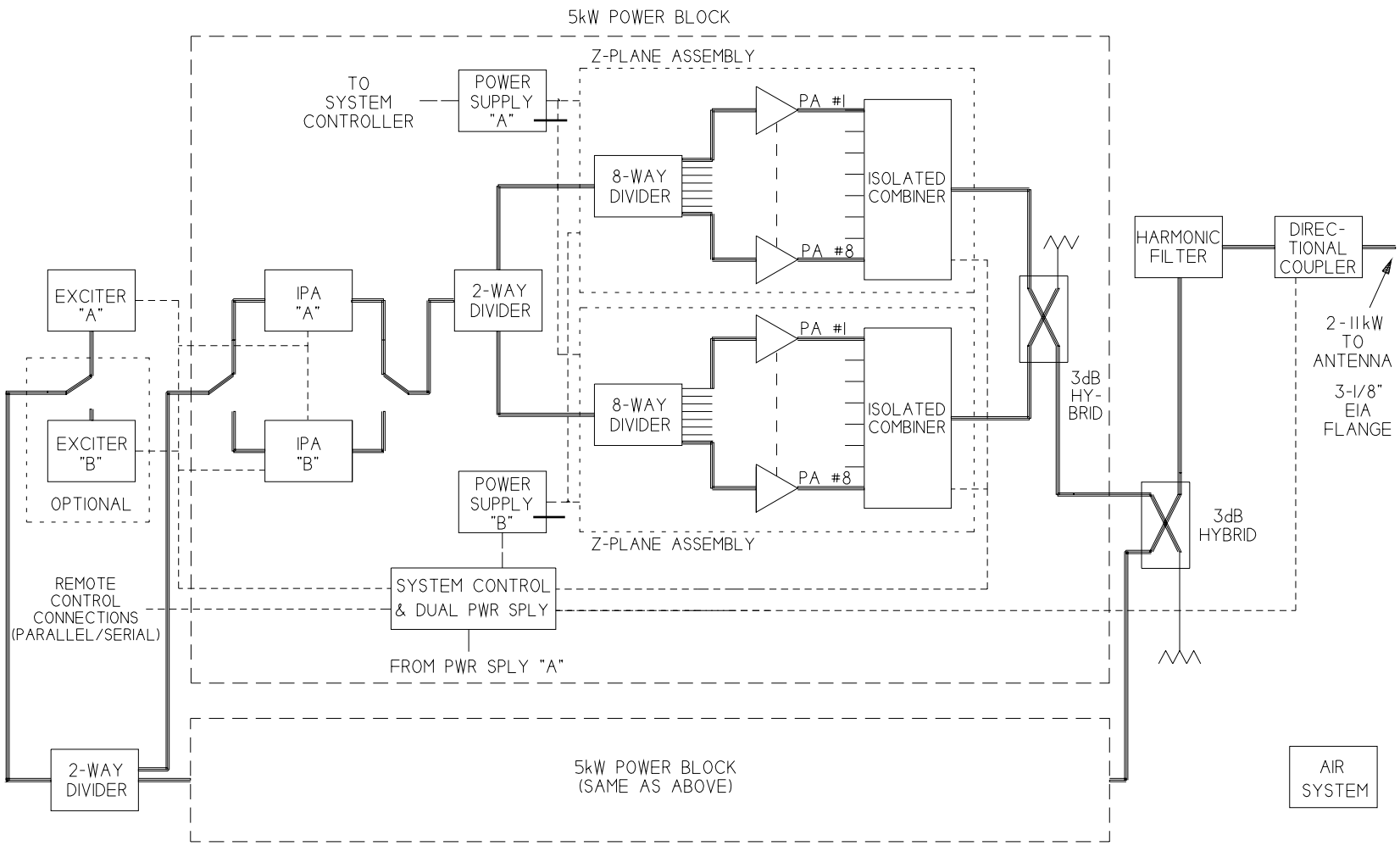

ZD20CD 20kW w/Switchless Combiner

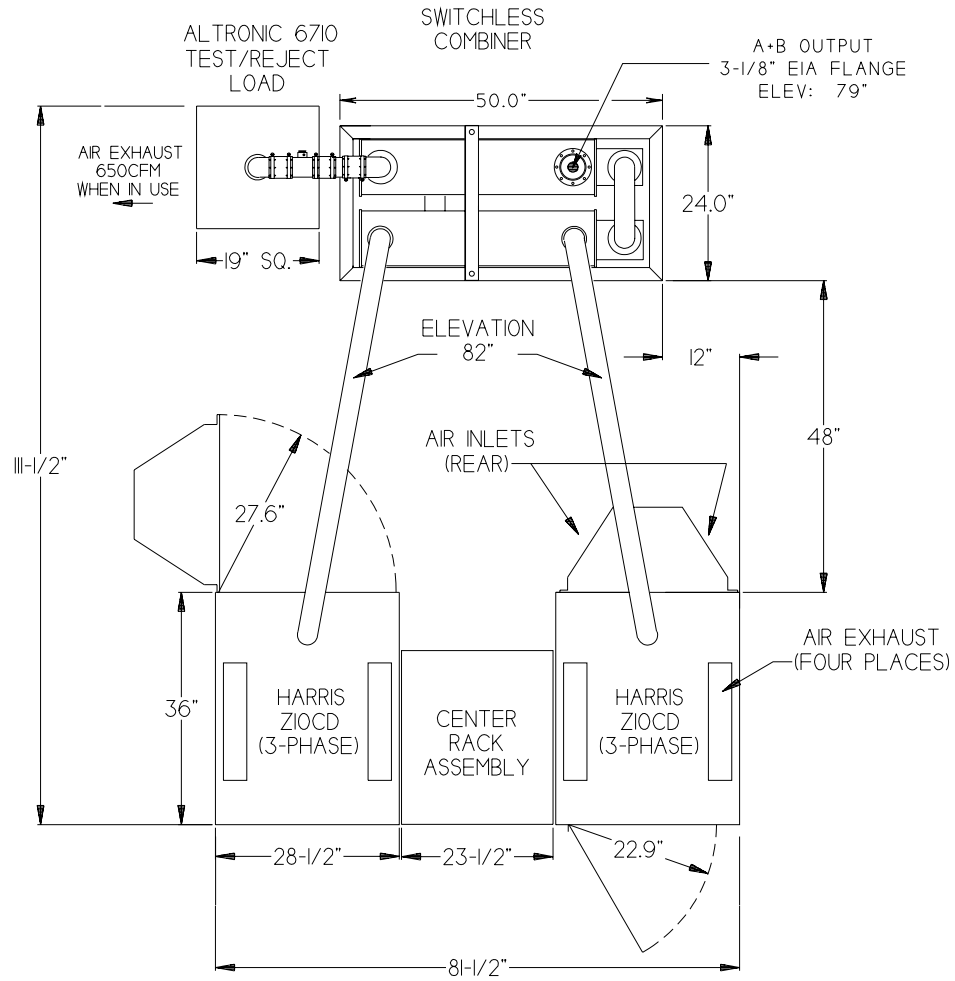

(Center rack optional)

ZD20CD 20kW Basic with 3dB Hybrid

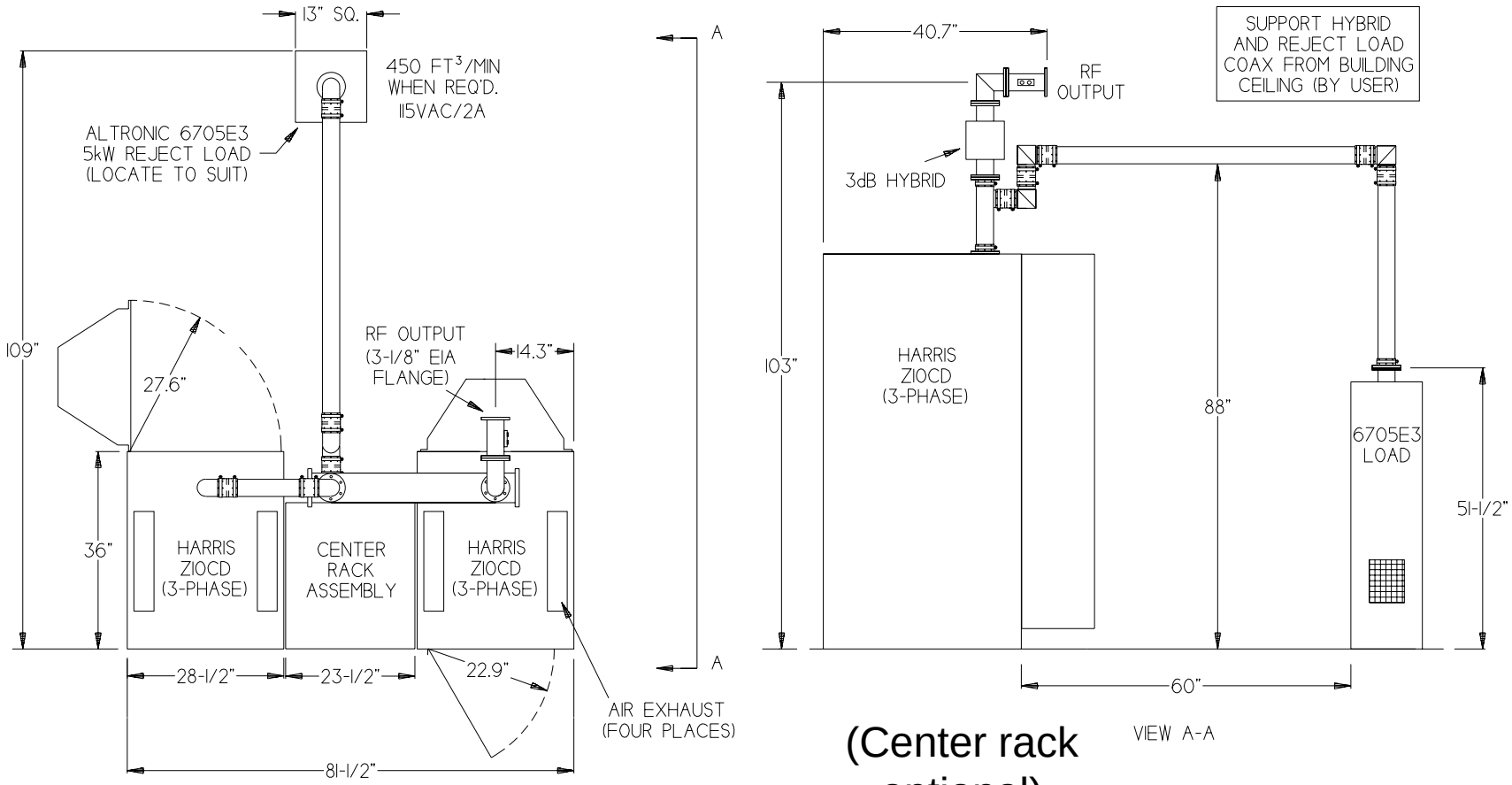

(Center rack optional)

KEY VALUE POINTS TO REMEMBER

- Includes the Harris DIGIT CD FM Exciter
- Built-in control logic and hardware for dual exciters
- Extensive diagnostic capability, local or remote
- Redundant power supplies
- Redundant, autoswitching IPAs
- “Soft-fail” RF configuration
- Hot-pluggable, interchangeable, lightweight RF modules

SELLING POINTS TO REMEMBER

- Second-generation Platinum PA amp design
- Power levels: 2, 3.5, 5, 7.5 and 10kW
- 20 kW and 40 kW combined versions using basic 3dB hybrid with or without patch panel or a switchless combiner
- Fifth generation Harris solid state FM transmitter
- Common parts throughout entire line
- Upgrade path to HD Radio

KEY VALUE POINTS TO REMEMBER

- High PA and overall efficiency
- Good power factor, low line harmonics
- Broadband, no tuning controls (N+1 capable)
- ISO 9001 accredited manufacturing facility
- Very fast, easy installation

Thank you for taking the Virtual Tour of the Platinum Z transmitter

To speak with a Harris representative

800-622-0022 US

217-222-8200 Global